Scandrive V30
Ductor drive

The ductor drive unit with integrated drive control circuit

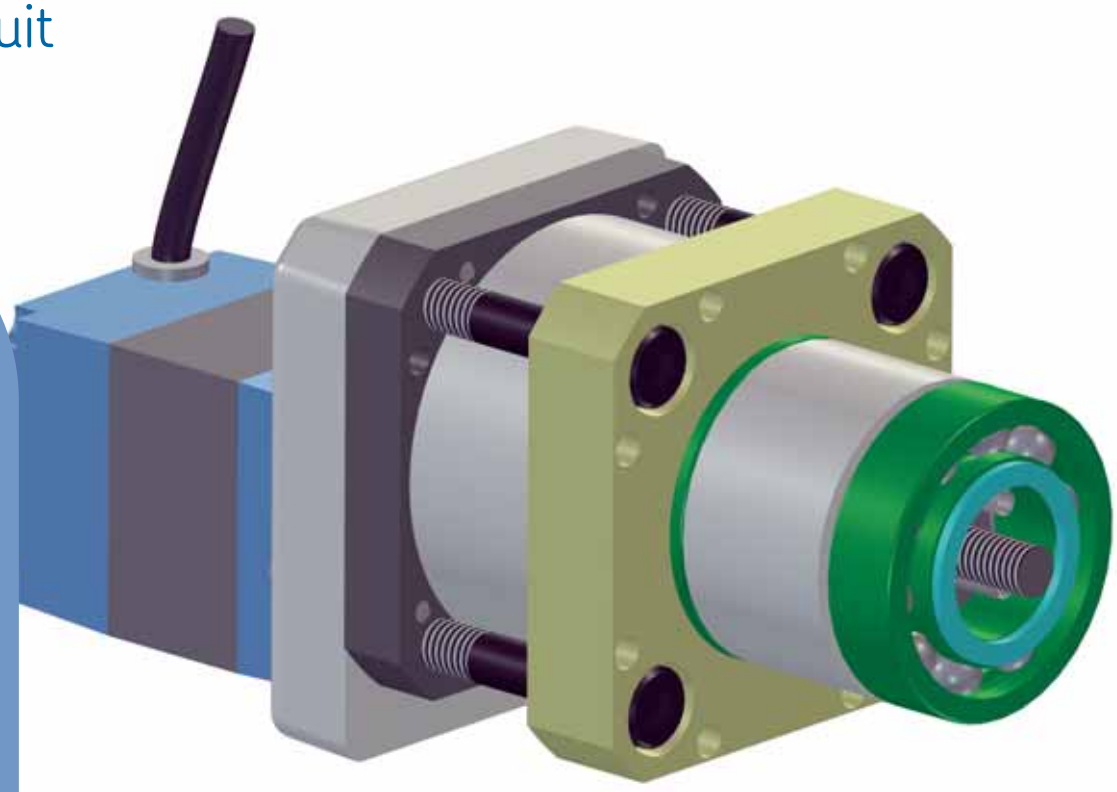

Speed control of the ductor roller is important in modern printing presses and justifies a separate speed controller. By default the roller follows the press speed proportionally. When a correction of the ink density across the full web width is required, the most convenient solution is to adjust the ductor speed, rather than adjusting all the ink keys. In some cases the press designer may specify a curvilinear ductor speed/press speed ratio.

In many situations mechanical drives direct from the main motor are no longer adequate. SKF's new V30 ductor drive unit provides the complete solution to this problem:

A brushless DC-motor, speed reducer and an integrated controller. All in a compact, protected and ready-to-install package.

The press builder provides the 24 VDC power supply, the stop/go, cw/ccw direction and speed control signals.

An integrated encoder delivers a speed feedback signal to the press control system.

A typical installation

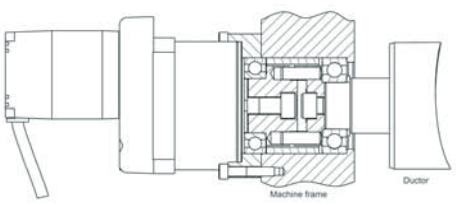

Scandrive V30

Dimensions

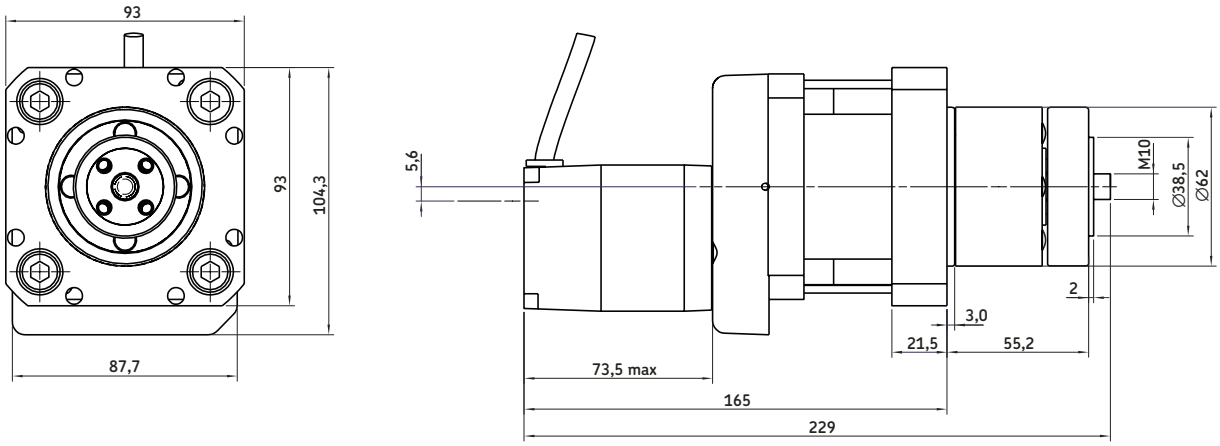

AMP MTA 100 640440-8 connector with AWG22 wire, ∅ over insulation 1,8 mm (supplied)

Marking on motor	Wire colour	
1*[a]	Black	0 V reference for the power supply
2*[a]	Red	Power supply 24 V
3*[b]	Blue	0 V reference for control (not isolated from 1)
4	Brown	0 10 V speed analogue input
5	Orange	PWM speed digital input (15 kHz)
6*[c]	Yellow	Logic input, direction of rotation (1=motor clockwise)
7	Green	Logic input, run/stop (1=run)
8	White	Encoder logic output, 12 pulses per motor rev - 5,136 per roller rev.

Necessary precautions to avoid damaging the motor:
*a) Do not reverse the polarity
*b) If only one power supply is used do not connect 3 to 1
*c) Stop the motor before changing direction

Technical data	Unit	Scandrive V30
Speed range	rpm	0 to 10
Torque, steady–state operation at 10 rpm	Nm	15
Torque, steady–state operation at < 7 rpm	Nm	22
Max starting torque	Nm	35
Power supply	VDC	24
Max current	A	2,5
Reduction gear ratio	-	428:1
Output shaft direction to motor direction	-	cw = cw

Please consult your SKF contact to check and approve all applications.

SKF Actuators AB
SE- 415 50 Gothenburg
www.actuators.skf.com

SKF is a registered trademark of the SKF Group.

© SKF Group 2006
The contents of this publication are the copyright of the publisher and may not be reproduced (even extracts) unless prior written permission is granted. Every care has been taken to ensure the accuracy of the information contained in this publication but no liability can be accepted for any loss or damage whether direct, indirect or consequential arising out of the use of the information contained herein.

Publication **6344EN - 0607A**